Mid West CONCRETE

Quality Concrete Manufacturers

Making the best quality pre-cast concrete products since 1985 & into the future!

- Stock-proof float valve cover
- Deep troughs to keep water cool
- Designed to last a lifetime
- 1" to 2" submerged float valve
- 40mpa concrete reinforced with mesh - cast & vibrated
- Smooth finish
- Brass fittings - high/low psi valve included
- Free standing
- Even distribution of water

20 YEAR GUARANTEE

Mid West CONCRETE
Quality Concrete Manufacturers
A.B.N. 63 003 687 152

Mid West Concrete Pty Ltd
84 Marshalls Lane Blayney NSW 2799
Phone 02 6368 2444 Fax 02 6368 2217
Email: sales@midwestconcrete.com.au
Web: www.midwestconcrete.com.au

November 2012

LONG WATER TROUGHS

L16C - DOUBLE CATTLE TROUGH - 1200 L CAPACITY

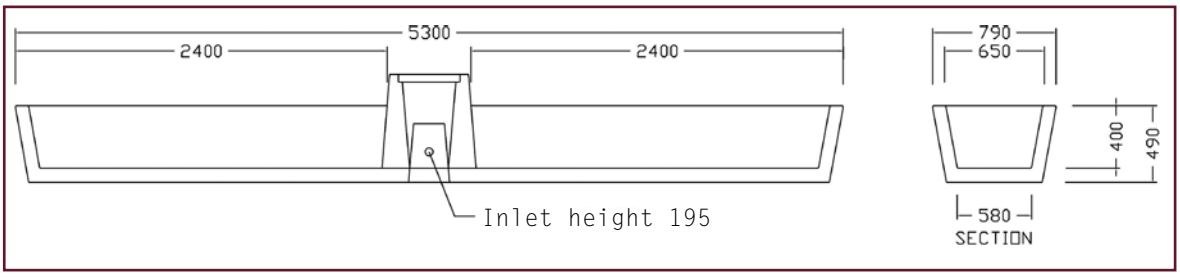

Length: 5300mm

Height: 490mm

Inlet: 50mm

Weight: 1700kg

$ _____

L16C - DOUBLE CATTLE TROUGH IN ACTION

These innovative water troughs with stock-proof float valve cover will save you time, money & precious water!

L16S - DOUBLE SHEEP TROUGH

L16LL - LONG LINE TROUGH

All our long troughs come with in-built float protection.

With a range of 15 different stock water troughs, we have one for almost any situation.

L16S - DOUBLE SHEEP TROUGH - 1000 L CAPACITY

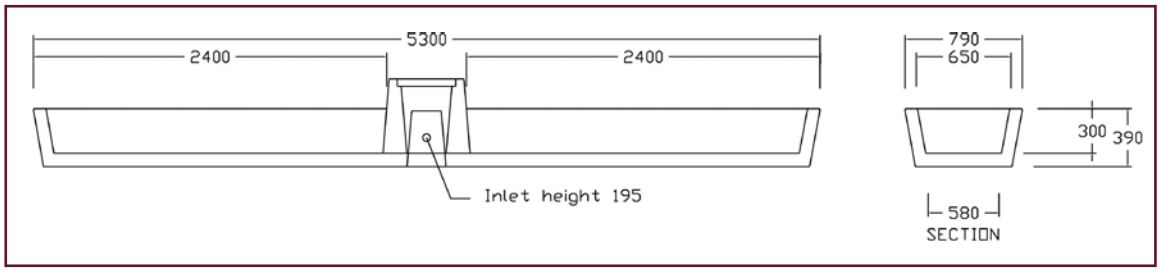

Length: 5300mm

Height: 390mm

Inlet: 50mm

Weight: 1600kg

$ _____

L16LL - LONG LINE TROUGH - 750 L CAPACITY

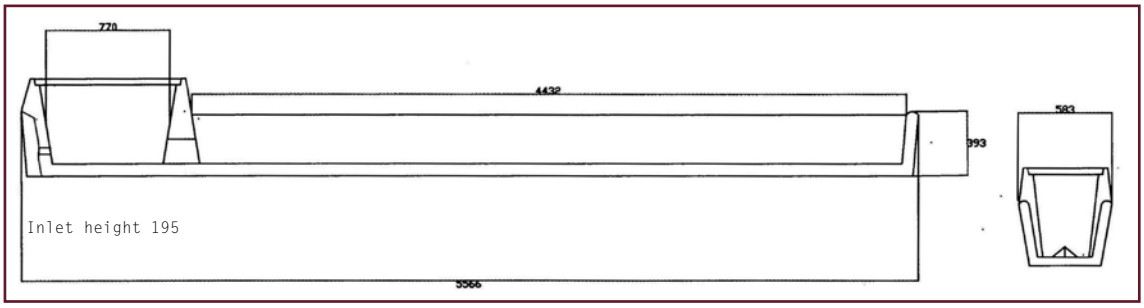

Length: 5570mm

Height: 395mm

Inlet: 50mm

Weight: 1400kg

$ _____

L8C - SINGLE CATTLE TROUGH - 650 L CAPACITY

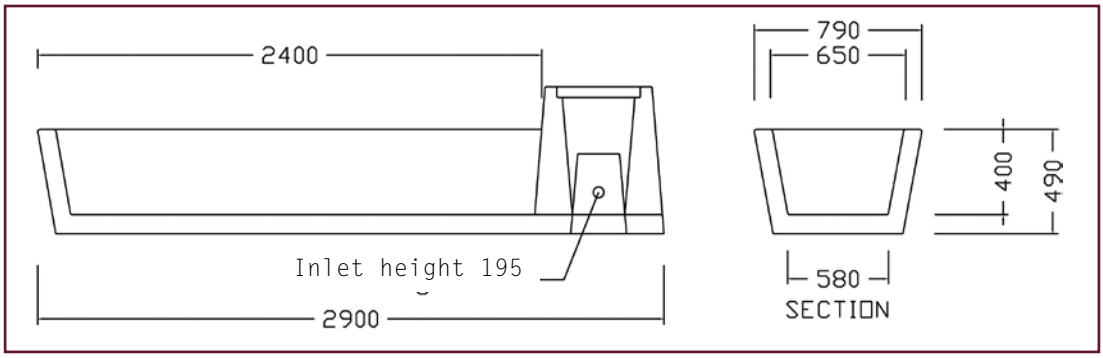

Length: 2900mm
Height: 490mm
Inlet: 50mm
Weight: 1100kg
$ _____

L8S - SINGLE SHEEP TROUGH - 550 L CAPACITY

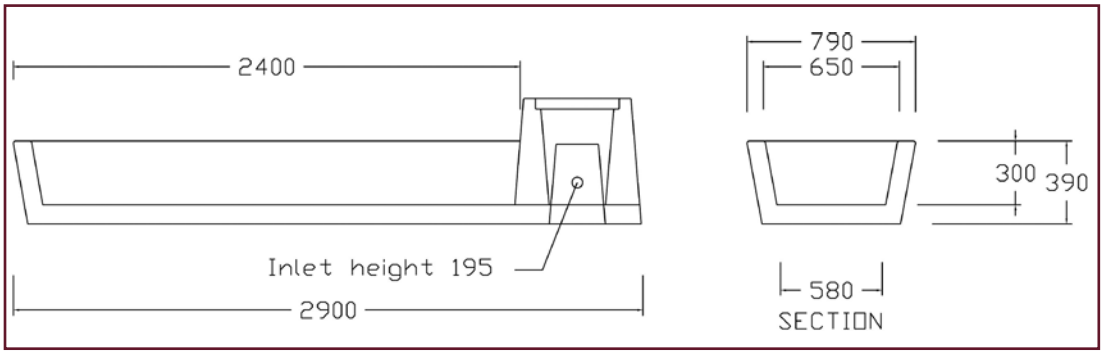

Length: 2900mm
Height: 390mm
Inlet: 50mm
Weight: 950kg
$ _____

L8S/C - SINGLE SHEEP/CATTLE TROUGH - 500 L CAPACITY

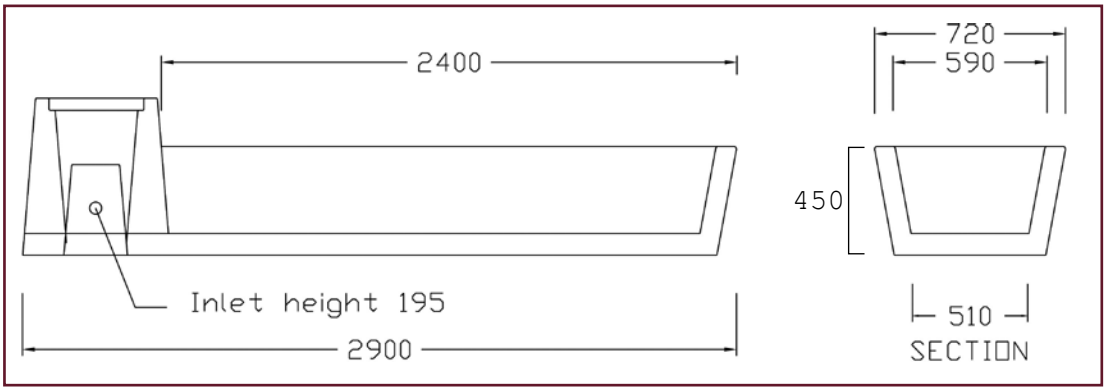

Length: 2900mm
Height: 450mm
Inlet: 50mm
Weight: 900kg
$ _____

L8S - SINGLE SHEEP TROUGH

L8S/C - SINGLE SHEEP/CATTLE TROUGH

L4 - 1200MM LONG TROUGH - 250 L CAPACITY

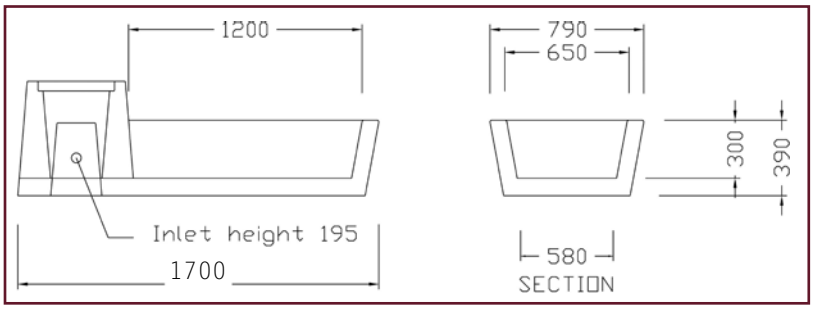

L4 - 1200MM TROUGH

Length: 1700mm

Height: 390mm

Inlet: 25mm

Weight: 542kg

$ _____

DCT - DOG TROUGH - 30 L CAPACITY

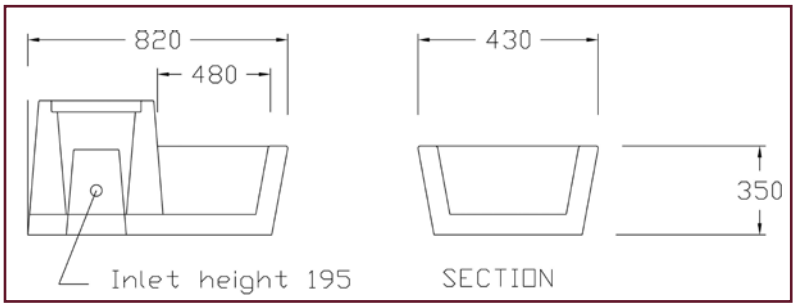

DCT - DOG TROUGH

Length: 820mm

Height: 350mm

Inlet: 19mm

Weight: 100kg

$ _____

HORSE TROUGHS

HD - DOUBLE HORSE TROUGH - 330 L CAPACITY

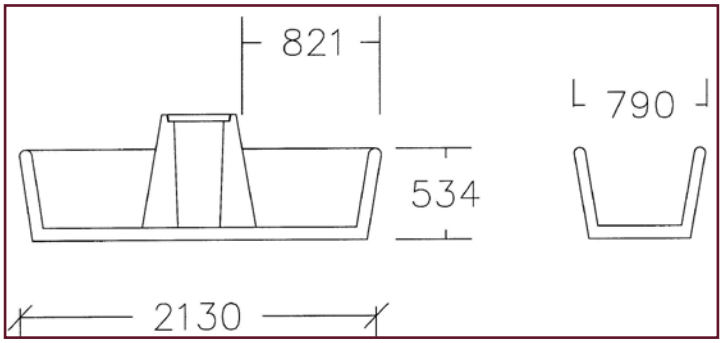

Length: 2130mm

Height: 534mm

Inlet: 25mm

Weight: 900kg

$ _____

Our range of horse troughs have been specially designed with round corners to minimise damage to horses and are small enough to minimise wastage when cleaning.

HS - SINGLE HORSE TROUGH

HD - DOUBLE HORSE TROUGH

HS - SINGLE HORSE TROUGH - 165 L CAPACITY

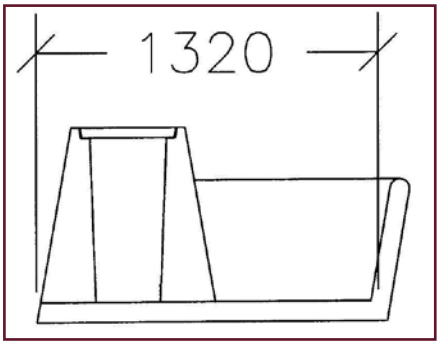

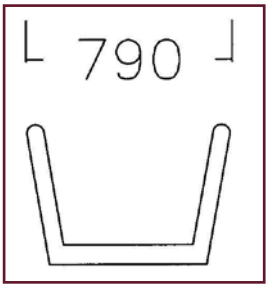

Length: 1320mm

Height: 534mm

Inlet: 25mm

Weight: 630kg

$ _____

ROUND CORNERS

NEW!!! PIG TROUGHS

L2 - SINGLE PIG TROUGH - 140 L CAPACITY

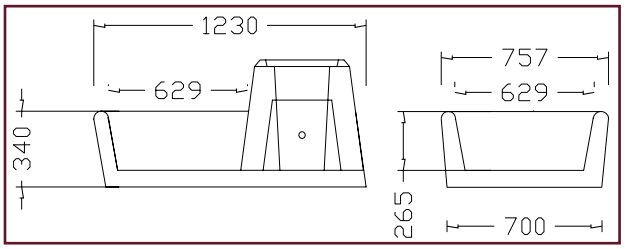

Length: 1230mm

Height: 340mm

Inlet: 25mm

Weight: 445kg

$ _____

L2X2 - DOUBLE PIG TROUGH - 230 L CAPACITY

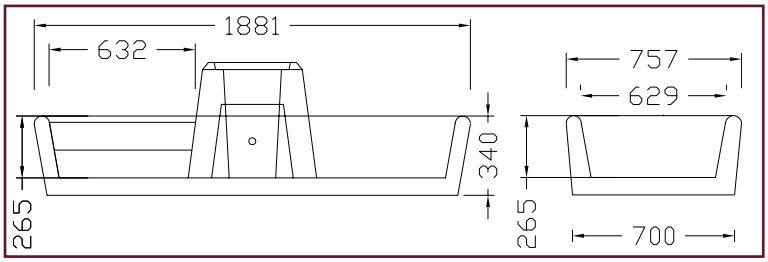

Length: 1881mm

Height: 340mm

Inlet: 25mm

Weight: 640kg

$ _____

CUP & SAUCER TROUGH

CST10 or CST16 - CUP & SAUCER TROUGH

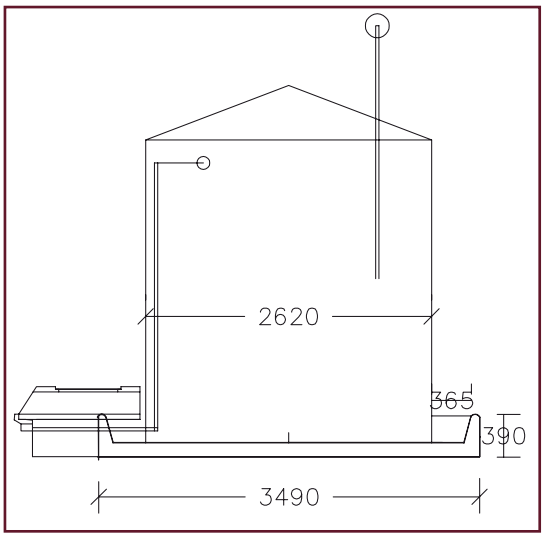

Due to popular demand, MWC has designed and manufactured our first cup and saucer trough.

The trough consists of a concrete base of the high quality you're used to from our products.

This in combination with a 10,000L or 16,000L Clark Tank makes this one of our biggest and proudest achievements.

Please note that larger diametre tanks can be supplied on request if necessary to discourage pigs etc.

Please contact the team at MWC for further information!

Tank

Width: 2620mm

Capacity: 10,000L or 16,000L

Trough

Width: 3490mm

Height: 390mm

Weight: 3700kg +160kg (lid)

$ _____

CUP & SAUCER TROUGH - INCLUDES FLOAT COVER PROTECTION RAIL (SHOWN HERE WITH 10,000L TANK)

ROUND WATER TROUGHS

R20 - 2000 L ROUND CATTLE TROUGH - 2000 L CAPACITY

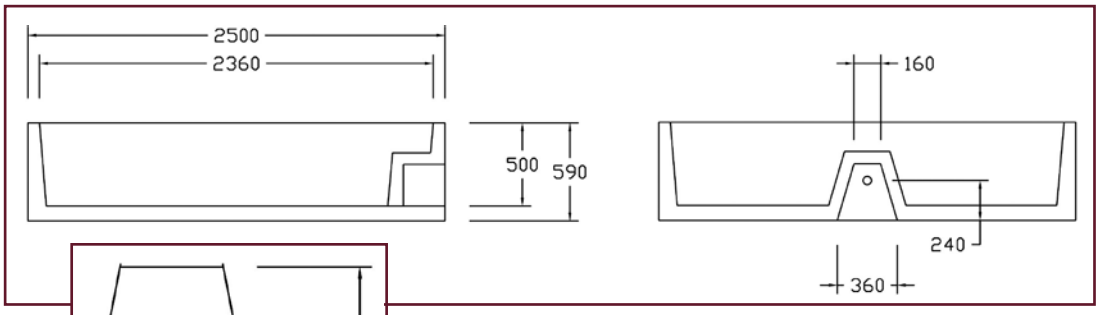

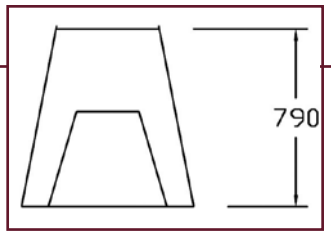

OPTIONAL FLOAT PROTECTOR

Diameter: 2500mm

Height: 590mm

Inlet: 50mm

Weight: 1700kg

(Float protector: 250kg)

$ _____

R15 - 1500 L ROUND TROUGH

R20 - 2000 L ROUND TROUGH
(WITHOUT FLOAT PROTECTOR)

R15 - 1500 L ROUND SHEEP TROUGH - 1500 L CAPACITY

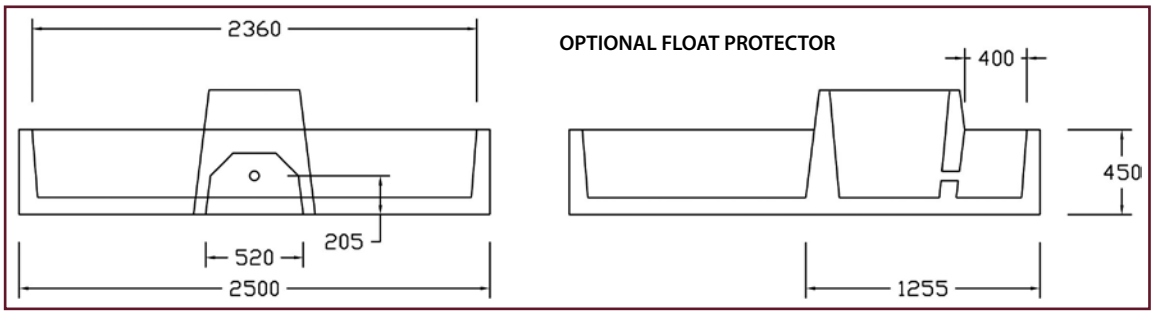

Diameter: 2500mm

Height: 450mm

Inlet: 50mm

Weight: 1850kg

(Float protector: 260kg)

$ _____

R10 - 1000 L ROUND CATTLE TROUGH - 1000 L CAPACITY

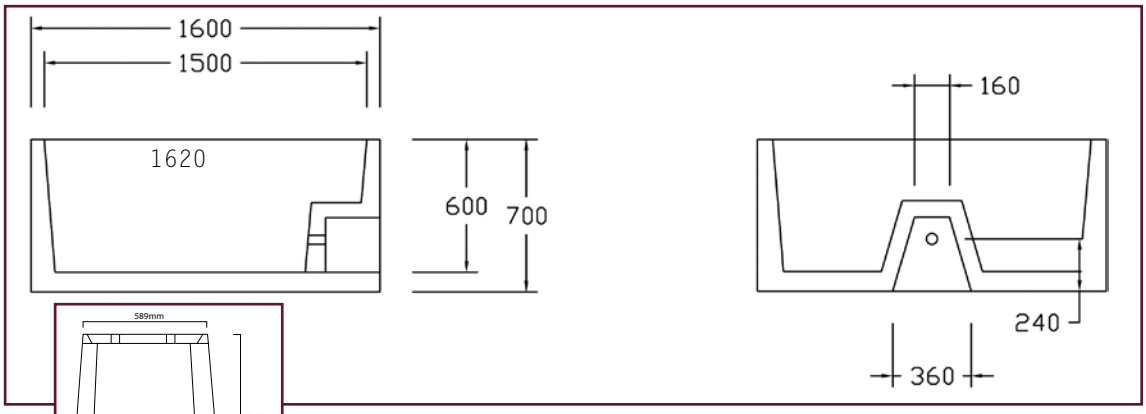

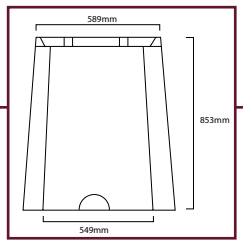

OPTIONAL FLOAT PROTECTOR

Diameter: 1620mm

Height: 700mm

Inlet: 50mm

Weight: 910kg

(Float protector: 280kg)

$ _____

NEW!!! R50 - 500 L ROUND SHEEP TROUGH - 500 L CAPACITY

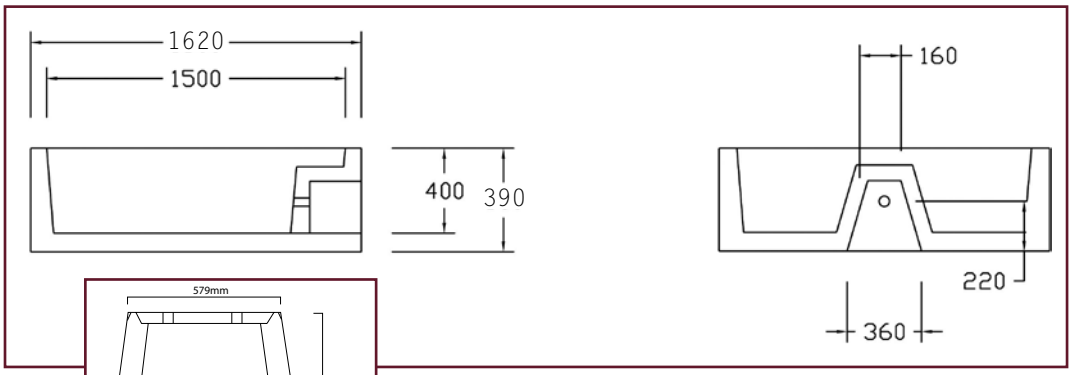

Diameter: 1620mm

Height: 390mm

Inlet: 40mm

Weight: 600kg

(Float protector: 260kg)

$ _____

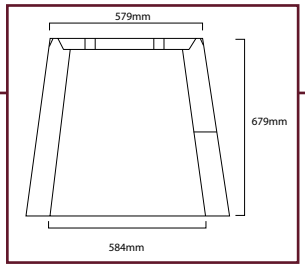

OPTIONAL FLOAT PROTECTOR

Our range of social round troughs are sometimes preferred as more stock can fit comfortably around the trough to drink at the same time.

All our round troughs can be supplied with or without float protection.

We are constantly updating and improving our range. Our staff will gladly help find a solution for your needs.

R50 - 500 L ROUND TROUGH

FEEDLOTS

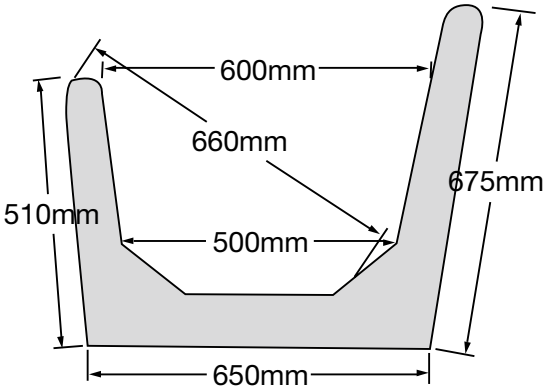

Cattle Feedlots:
Length: 3000mm
Capacity: 0.9 m3 / m
Weight: 1200kg

Also available are pig feedlots in lengths of 1200mm & 2400mm

FL3M - CATTLE FEEDLOTS

FLOAT VALVES

Our troughs all come with standard inlet sizes, however they can be made specially with larger inlets (up to 2" / 50mm) or reduced down (to 1 1/2" / 40mm or 1" / 25mm) with reducing bushes.

Standard float valve is HP40CSS (1 1/2" / 40mm High Pressure) unless otherwise specified.

HP25TSS7 & HP40TSS
This version of the high pressure valve has 3 fixing positions on the stainless steel arm to give a water level variation of approx 70mm. Extra adjustment can be achieved by bending the arm. Comes with 7" ball.
Sizes: 1" / 25mm & 1 1/2" / 40mm
(Standard valve for L4)

FF25T7, FF40T & FF50T
This full flow valve features full threaded arm adjustment in 2 sections as shown. Ball included.
Sizes: 1" / 25mm, 1 1/2" / 40mm & 2" / 50mm
(Standard LP valve for all long troughs)

HP25CSS7 & HP40CSS
These extremely reliable high pressure valves come complete with 316 stainless steel arm offering superior strength. Supplied with cord & 7" ball.
Sizes: 1" / 25mm & 1 1/2" / 40mm
(Standard valve for all troughs except L4 & DCT)

FF25C & FF40C7
This is one of the the most popular and reliable low pressure valves on the market. Flow is true full flow which reduces the problem of inline blockage. Comes with cord & 7" ball.
Sizes: 1" / 25mm & 1 1/2" / 40mm
(Standard LP valve for round troughs)

MV25 & MV40 - STOCKMASTER
Compact, heavy duty brass & stainless steel construction. Operates at full flow through the total operating cycle of the main valve. Operates under low & high pressure. Comes with 7" ball.
Sizes: 1" / 25mm & 1 1/2" / 40mm
(Can be used in all troughs)

OTHER PRODUCTS

We also manufacture:

- **Headwalls: 300mm to 900mm**
- **Stormwater pits: 450mm, 600mm & 900mm**
- **Water tanks: 5000L**
- **Suppliers of concrete pipe**
- **Stock grids**
- **Sumps: 300mm to 450mm**
- **Septic tanks: 2050 to 4000L**
- **Collection wells: 2050 to 4000L**
- **Grated stormwater drains**
- **Retaining walls**

Mid West CONCRETE
Quality Concrete Manufacturers
A.B.N. 63 003 687 152

84 Marshalls Lane Blayney NSW 2799
Phone 02 6368 2444 Fax 02 6368 2217
Email: sales@midwestconcrete.com.au
Web: www.midwestconcrete.com.au

YOUR AGENT: